line-voltage pendants

LED

isla pendant

DESCRIPTION
Irregular round-shaped glass with a hand blown organic seeded technique leaves hundreds of bubbles suspended within the glass. Available with or without lamp. E26 medium base socket 60w max. LED includes (1) E26 medium base A19 6.5 watt 650 lumen 80 CRI 2300K LED lamp. Incandescent dimmable with a standard incandescent dimmer. LED dimmable with LED compatible dimmer. 120v.

WEIGHT
3.06lb / 1.39kg ±

aqua

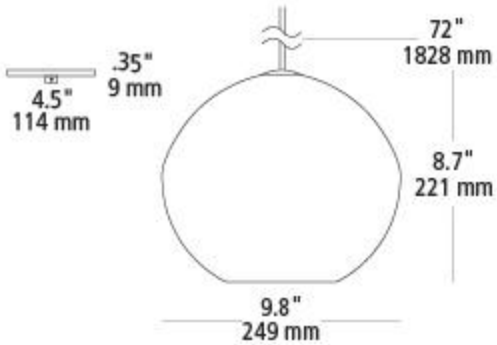

amber aqua brown clear smoke

ORDERING INFORMATION

type	model	color	finish	lamp
LF incandescent	**512**	**AM** amber **AQ** aqua **BR** brown **CR** clear **SM** smoke	**BZ** bronze **SC** satin nickel	No Lamp **LED823** LED A19 6.5w 80 CRI 2300K 120v

FIXTURE TYPE: _____

JOB NAME: _____

NOTES: _____

_____

_____

7400 Linder Avenue
Skokie, Illinois 60077

T 847.626.6300
F 847.626.6350

www.lbllighting.com

©2017 LBL Lighting. All Rights Reserved. The "LBL Lighting" graphic is a registered trademark of LBL Lighting. LBL Lighting reserves the right to change specifications for product improvements without notification.